BUILD A PIANO!

The piano is one of the most popular musical instruments in the world, and here's your chance to build one of your very own. The first piano was constructed by Bartolomeo Cristofori, Keeper of the Instruments for the Grand Prince of Tuscany, in roughly 1700. Today, there are many types of pianos, including grand pianos and upright pianos (like this one). This kind is called an "upright" because it takes up less space due to the strings and frame being vertical instead of horizontal.

You can build this piano using pieces from your LEGO collection.

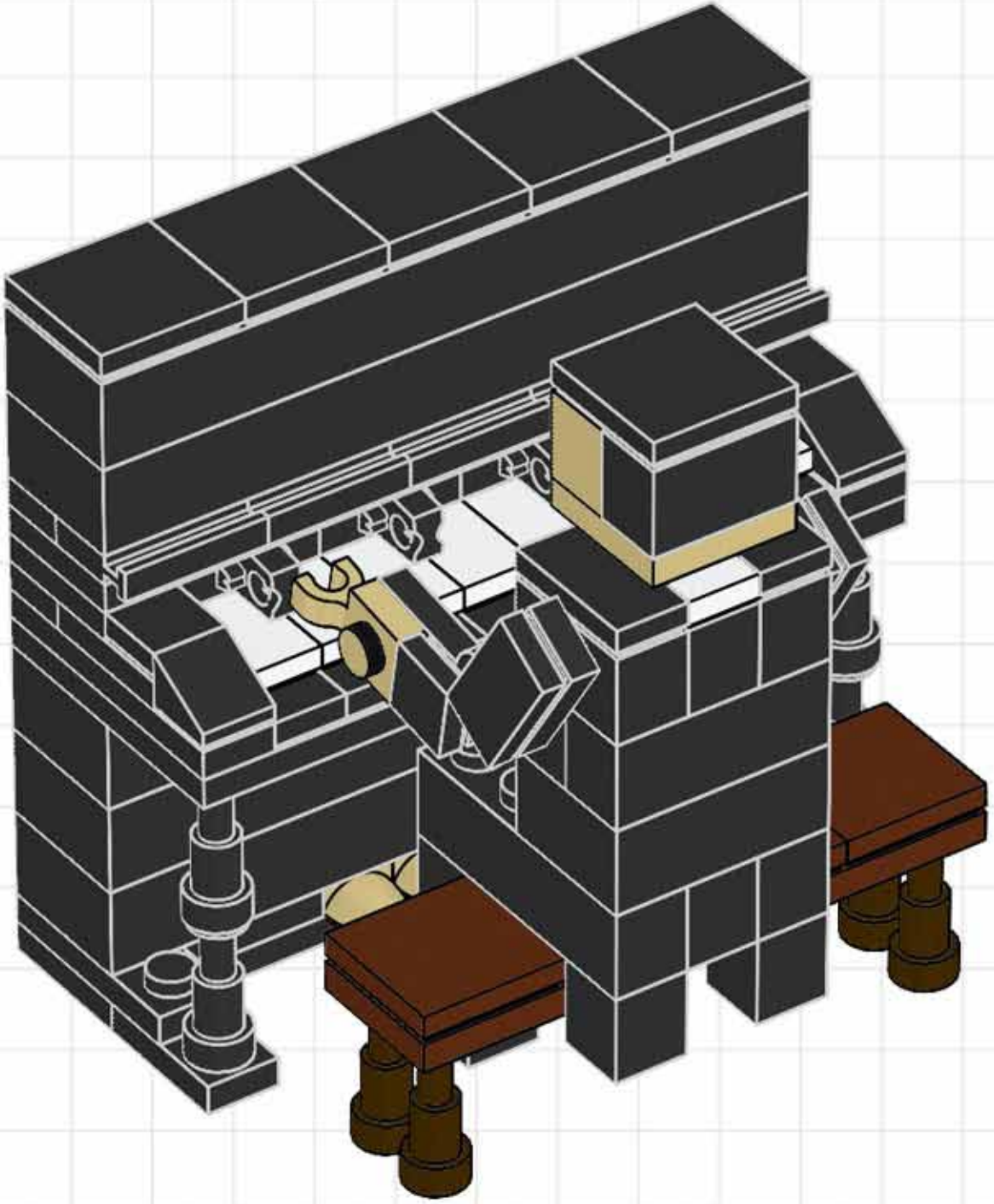

LEGO club™

PIANO BUILDING STEPS!

LEGO club

1

2

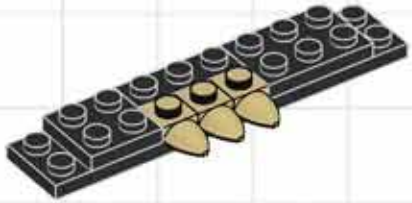

3

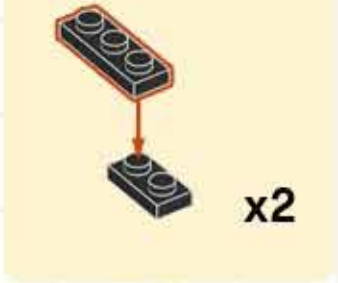

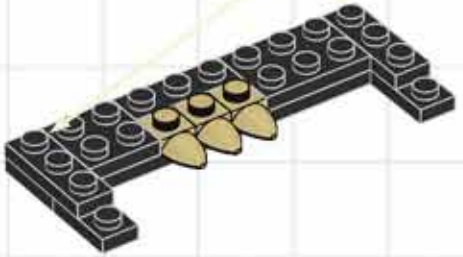

4

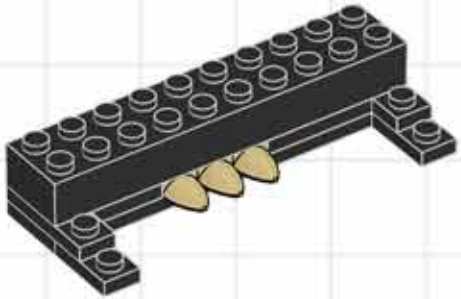

5

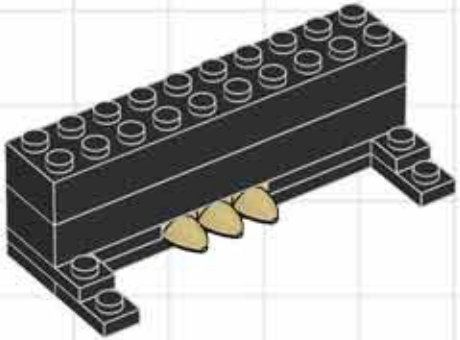

6

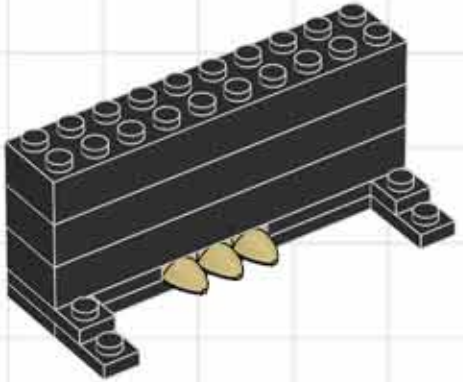

PIANO BUILDING STEPS!

LEGO club

7

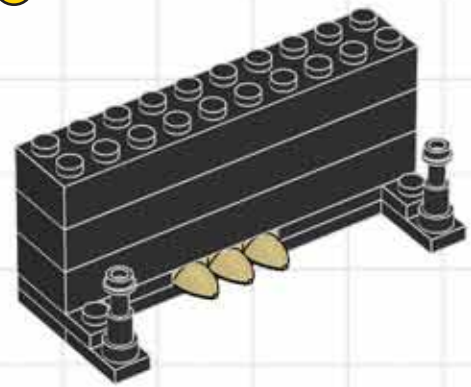

8

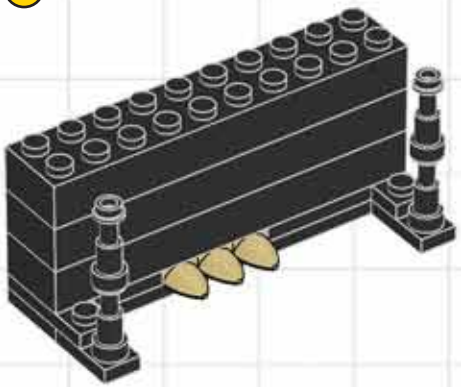

9

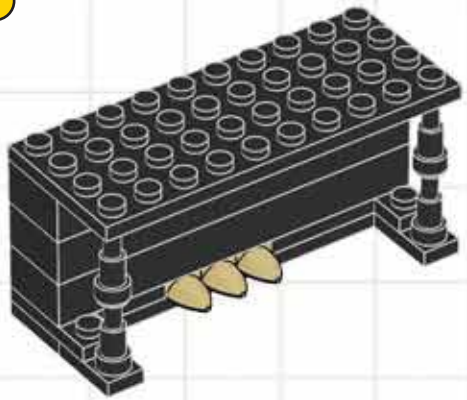

10

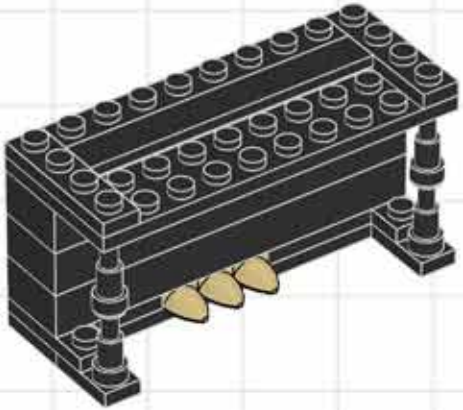

11

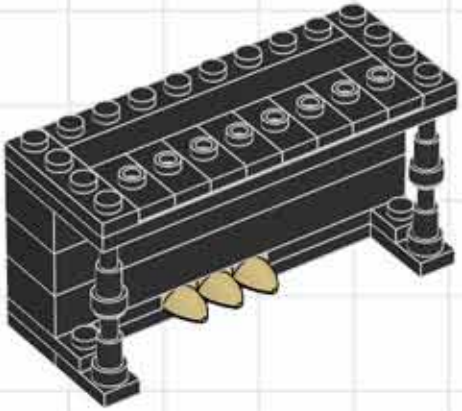

12

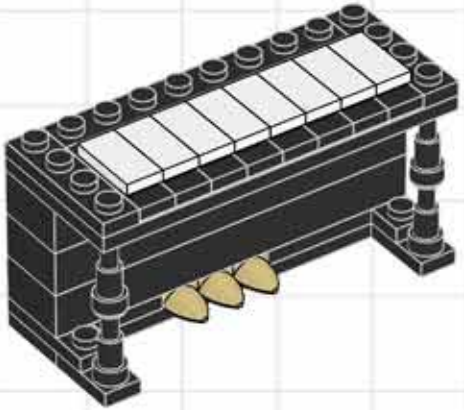

PIANO BUILDING STEPS!

13

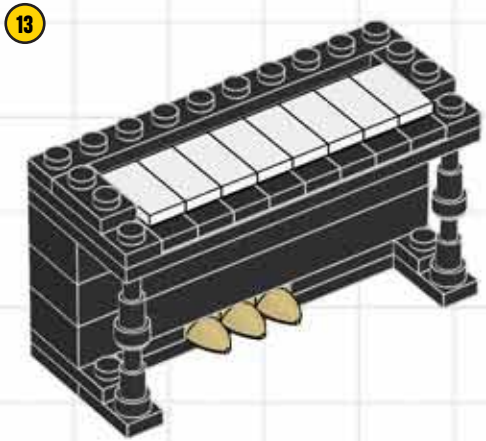

14

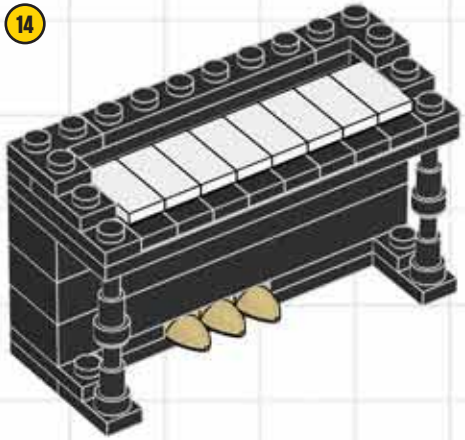

15

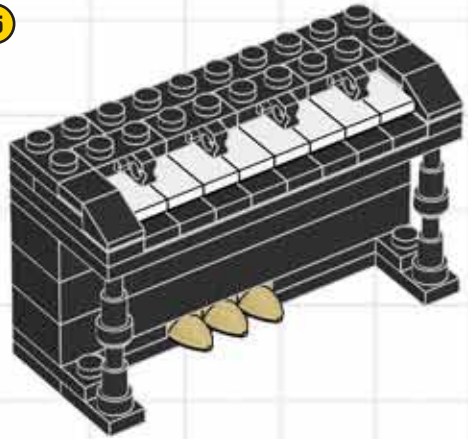

16

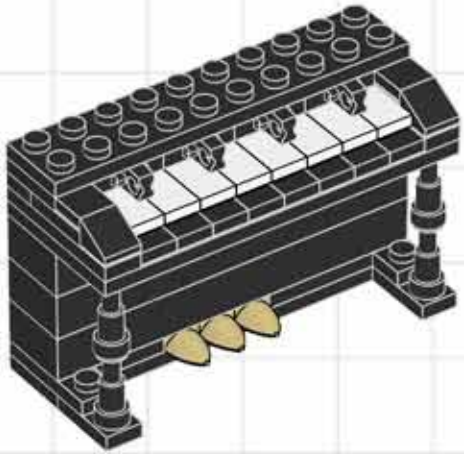

17

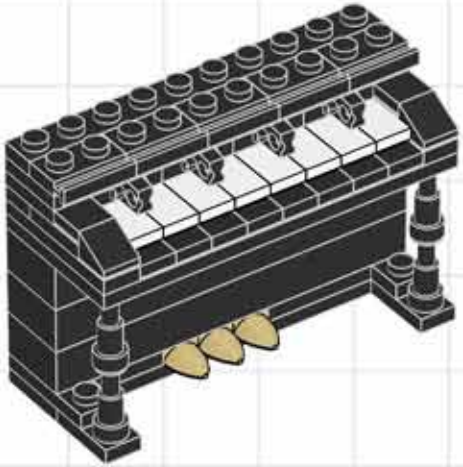

18

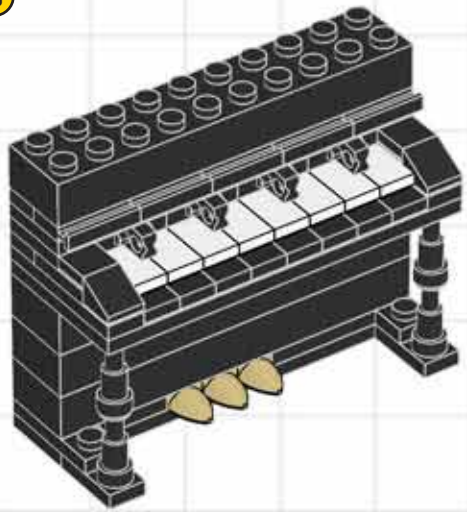

PIANO BUILDING STEPS!

19

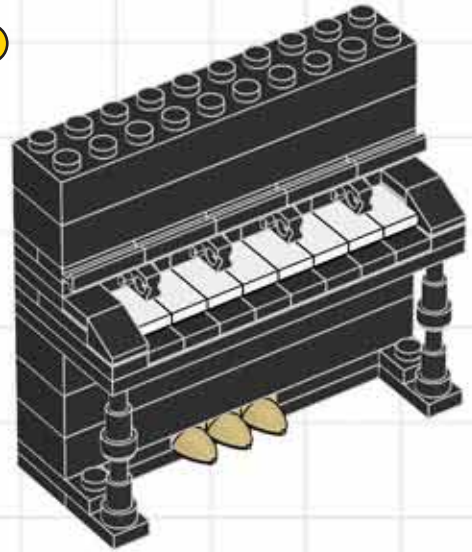

20

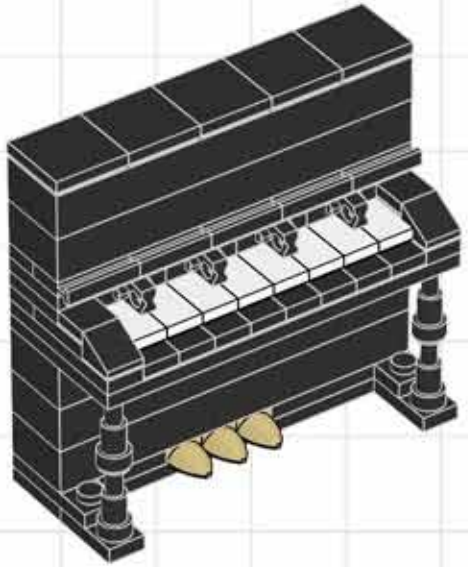

1

2

3

PIANO BUILDING STEPS!

LEGO club

4

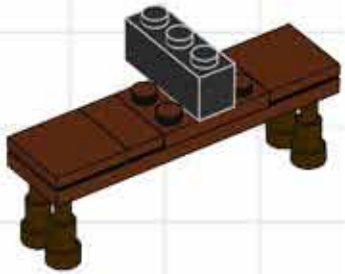

a b c

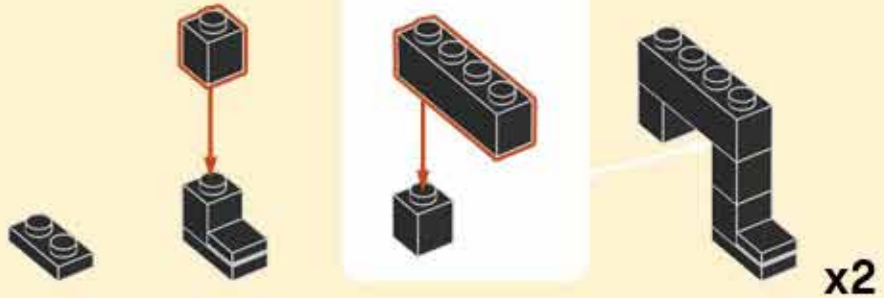

5

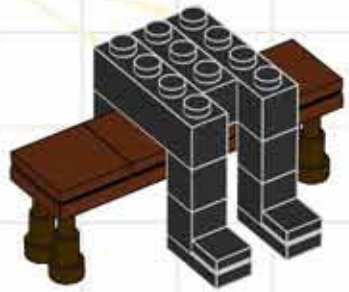

6

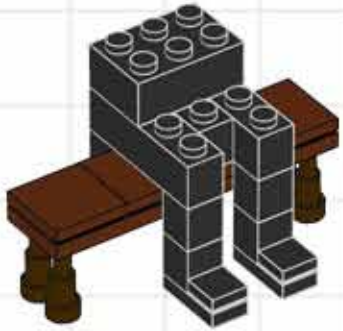

7

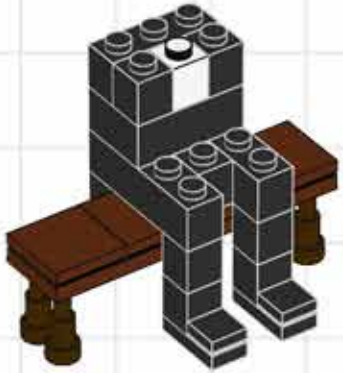

8

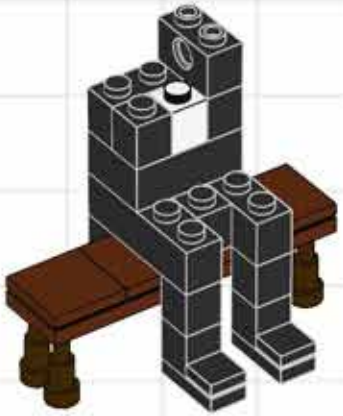

PIANO BUILDING STEPS!

LEGO club

9

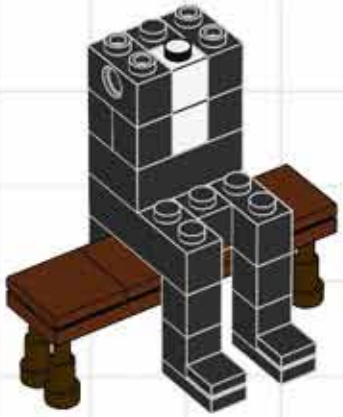

10

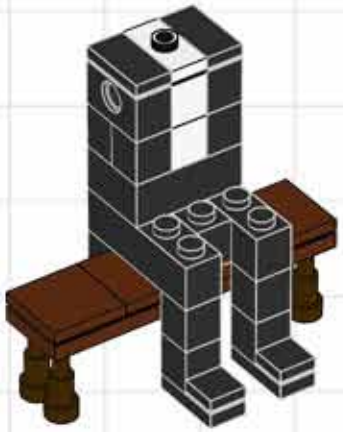

11

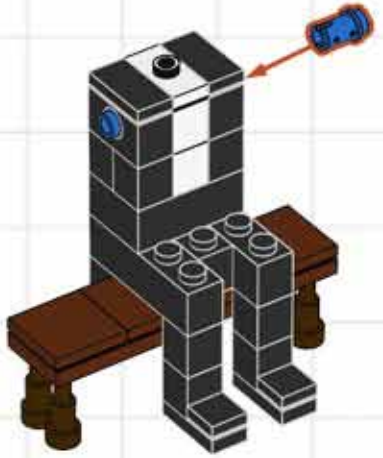

12

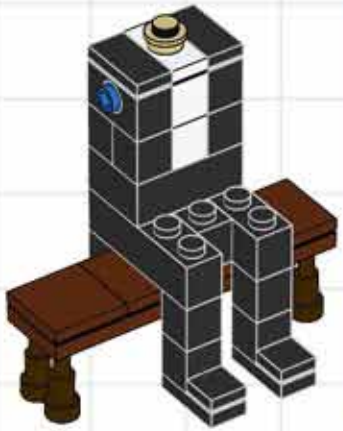

a

b

c

13

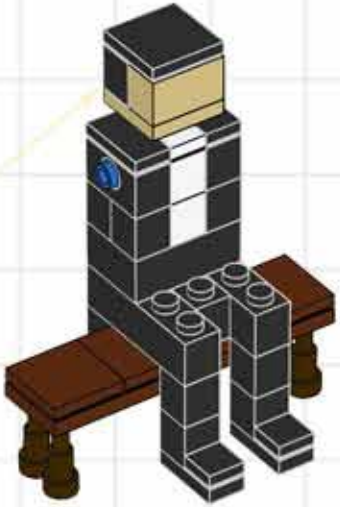

PIANO BUILDING STEPS!

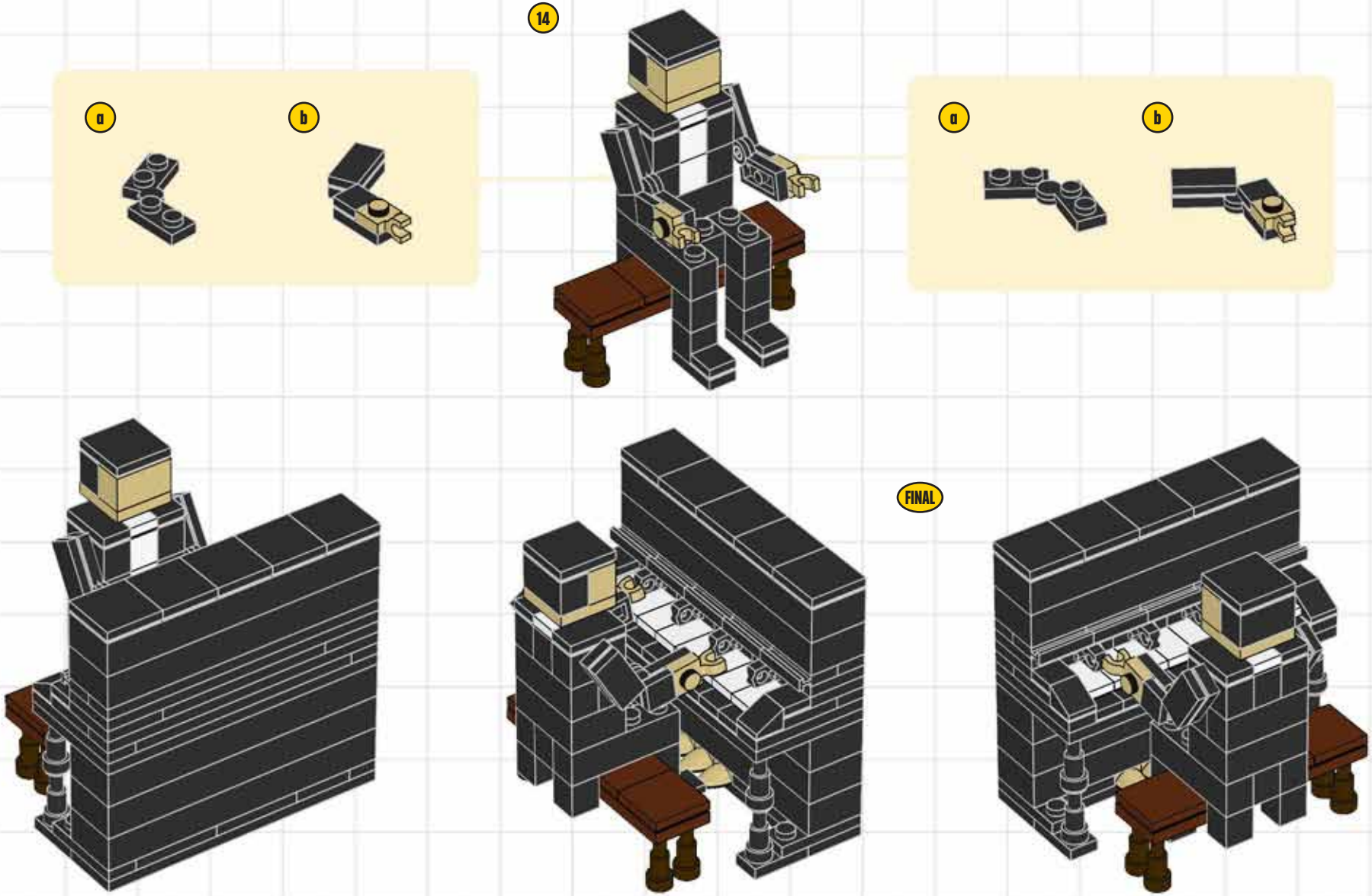

PIANO BUILDING STEPS!

x2 383226

x6 302326

x3 362326

x1 302126

x1 302226

x8 379426

x5 4617860

x3 4224793

x4 4538456

x2 371026

x1 303026

x2 4504382

x1 346026

x1 416226

x6 307026

x8 306901

x2 447726

x4 4185620

x2 242026

x1 366626

x5 4107761

x6 306826

x4 4538950

x1 4211211

x2 4271949

x1 4511151

x1 4211189

x9 300526

x2 301026

x2 362226

x2 300501

x1 300226

x2 370026

x1 379401

x4 306926

x1 4161734

x1 4114084

x1 4109995

x1 300426

x2 4143005

x2 4520947

x2 74011

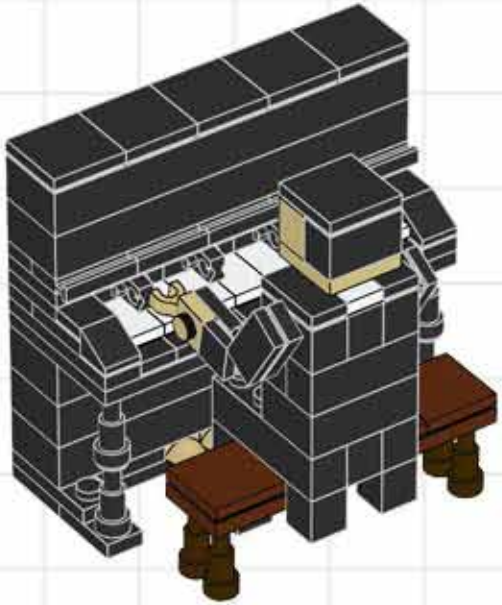

LEGO and the LEGO Logo are trademarks of the LEGO Group. © 2011 The LEGO Group.